IEICE TRANS. COMMUN., VOL.E94–B, NO.5 MAY 2011

PAPER Special Section on Antenna and Propagation Technologies Contributing to Diversification of Wireless Technologies

Ultra-Wideband Array Antenna Utilizing Novel Scanning System with Tapped Delay Lines for Short Range Radar

Fuminori SAKAI[†a)], ***Member***, **Kazuo OHTA**[†], ***Nonmember***, ***and*** **Kunio SAWAYA**[††], ***Fellow***

SUMMARY A UWB impulse array antenna (IAA) utilizing a novel electrical scanning system with tapped delay lines is proposed and its usefulness is experimentally verified. The experimental antenna is composed of impulse generators installed in each antenna element and tapped delay lines used for creating transmitting trigger signals, which is a simple circuit configuration. It is shown that the output phase of the transmitting wave can be controlled by controlling the period of the trigger signal, and beam direction can be controlled from −30 deg to +30 deg by changing the trigger frequency from *Fc* −2 kHz to *Fc*+2 kHz. Evaluation of this antenna as a short range radar is carried out and distance resolution of 25 cm and angle resolution below 10 deg are obtained.

key words: *array antenna, delay line, impulse, scanning antenna, ultra-wideband*

1. Introduction

Recentry, UWB radars for automobile anti-collision systems [1], [2] have been developed because of their capability for high space resolution. UWB radars have been also applied to through-wall radars [3], [4] for antiterrorism. A monopulse receiving method [5] for direction finding has been used mainly in both radar systems; however, this method has disadvantages: (1) it is difficult to distinguish received signals scattered by two targets which located at different points with the same distance from the radar. Also there is a high probability of detecting false targets in a multipath environment. (2) measurement of longer range degrades accuracy of angle resolution. For improvement it requires to increase the array spacing of receiving array antenna. (3) beam width of antenna element is required to be wider than angle resolution, which causes lower antenna gain and shorter detective range.

The above mentioned disadvantages can be removed by introducing the beam scanning of the transmitting antenna and/or the receiving antenna, but it brings another problem that wideband phase shifters and controllers, which are very expensive because of their complicated circuit system and large circuit size [6], are required to realize the scanning UWB system. To solve these problems, the authors have proposed a novel scanning method which uses a newly developed UWB impulse array antenna (IAA) and verified the usefulness [7]. The array antenna is composed of antenna elements and tapped delay lines. Each antenna element is equipped with an impulse generator, and tapped delay lines are connected between the antenna elements and trigger generator as a phase controller for each antenna element. The transmitting antenna beam can be scanned by changing the frequency of the trigger signal, which is applied at the input port of the tapped delay lines. Since the trigger frequency for this method is several MHz, tapped delay lines can be easily realized by applying the conventional circuit technology and have excellent performance stability. In this paper, we describe a newly developed UWB array antenna. A short range radar was fabricated and its basic performances are evaluated showing high ability of space resolution.

Manuscript received September 3, 2010.
Manuscript revised December 17, 2010.

[†]The authors are with Sakura Tech Corp., Kawasaki-shi, 213-0012 Japan.
[††]The author is with Tohoku University, Sendai-shi, 980-8579 Japan.
a) E-mail: sakai@sakuratech.jp

DOI: 10.1587/transcom.E94.B.1194

2. Overview of the Scanning System

Figure 1 shows classification of typical antenna scanning systems. These systems are roughly divided into two groups as shown in the figure; one is mechanical and the other is electrical scanning. Mechanical scanning system, however, has disadvantages such as low scanning speed, large size and low reliability, for the application to the short range radars considered here.

In UWB radar application, the electrical scanning by phase or frequency control seems to be very difficult to design because of wide-band signals which are intrinsic issue for UWB systems. Also, conventional time delay scanning is not suitable because required accuracy of delay time of delay line is difficult to attain using the conventional circuit technology. Proposed system, therefore, is considered

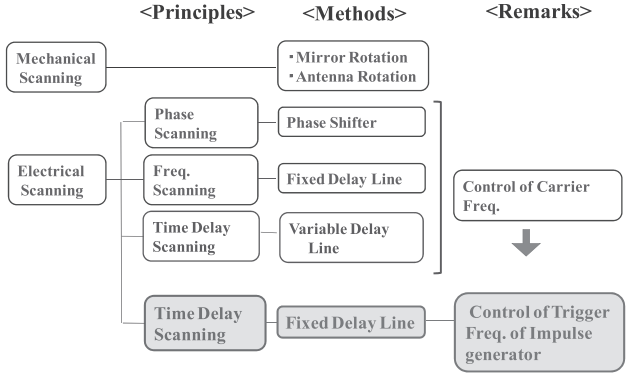

Fig. 1 Classification of radar scanning systems.

Copyright © 2011 The Institute of Electronics, Information and Communication Engineers

to be one of the candidates for practical scanning system for UWB application at the present time.

3. Principle of Proposed UWB Impulse Array Antenna

Figure 2 shows the basic configuration of the UWB impulse array antenna (IAA) with four antenna elements to be discussed here [7]. This scanning antenna is composed of antenna elements impulse generators and delay lines. These delay lines have the fixed delay time T_D and are driven by periodic trigger signals with the interval T. The beam scan angle of the array antenna can be controlled by adjusting the trigger interval T. The waveforms of the outputs of the pulse generators are exactly the same except for the delay time of the waveforms which can be controlled easily only by varying the trigger interval T.

In the case of the trigger signal (a) in Fig. 2, all impulse generators are driven simultaneously because the delay time of each delay line is equal to the trigger interval T. Therefore, there is no phase difference between the output pulse train of the impulse generators, and the beam direction is θ=0. The trigger signal (b) in Fig. 2 is an example of the case in which the trigger interval T is longer than the fixed delay time T_D. In this case, the beam direction becomes $\theta > 0$. In contrast, when the delay time T_D is longer than the trigger interval T, the beam direction becomes $\theta < 0$. This seems to be one of the special features of this method, i.e., beam scanning can be easily achieved by changing trigger interval T. The equations for this relationship are expressed by

$$\sin\theta = \frac{T - T_D}{d/c}, \quad \frac{T_D}{2} < T < \frac{3T_D}{2} \tag{1}$$

where

T: trigger interval
T_D: delay time of delay line
d: spatial distance between antenna elements
c: speed of light.

The delay time between one antenna element and the next element can be expressed as the time difference between the delay time T_D of a fixed delay line and the trigger interval T. This method is suitable for the beam steering of a wide-band antenna regardless of frequency.

Figure 3 shows the relationship between the beam direction and the trigger frequency which is the inverse of trigger interval T calculated by equation (1), where the center frequency of trigger signal is 5 MHz at which the direction is θ=0. In the figure Fc and f express the center frequency and the frequency deviation from Fc, respectively. The spacing of an antenna element d was chosen to be 40 mm, 50 mm, and 60 mm that are corresponding to 0.53λ, 0.66λ, and 0.8λ, respectively, at 4 GHz.

It can be seen from the results that a beam scanning range of ±30 deg can be obtained by changing the trigger frequency to ±2 kHz when d=50 mm. Since the frequency of transmitting signal is around 4 GHz and the trigger frequency is about 5 MHz, 800 times multiplyings rate is used.

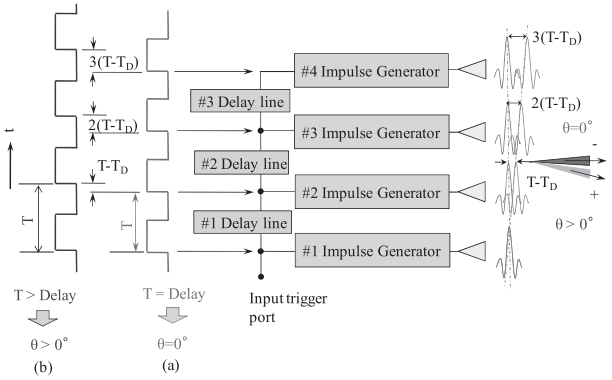

Fig. 2 Basic configuration of UWB impulse array antenna.

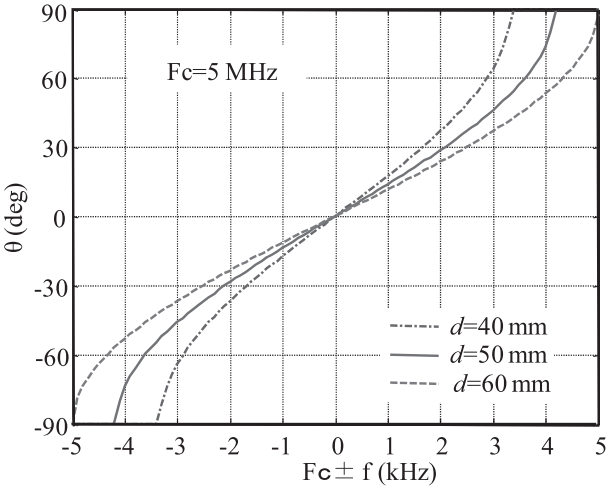

Fig. 3 Beam angle versus Tx trigger frequency.

When trigger frequency changes to ±2 kHz from center frequency, the variation of the base line spectrum becomes ±1.6 MHz. However, it seems that this has little effect on the degradation of the transmitting waveform because UWB signals contain a wide band spectrum.

4. Designed Array Antenna

The configuration of the designed UWB array antenna is composed of four serially connected subunits including antenna elements. A photograph of the array antenna is shown in Fig. 4. The corresponding circuit diagram of a subunit is shown in Fig. 5. Each subunit is composed of a delay line, an impulse generator, a band-pass filter, an antenna element and a power supply circuit, which are integrated on the same substrate. Impulse generator is composed of step recovery diode and driver amplifier. The delay lines are commercially available IC's having approximately 200 ns delay time. The wave form of trigger signals is sinusoidal and fine adjustment of delay time of these signals is carried out at the output of the tapped delay lines using CR circuit as shown in the figure. Then these signals are amplified so as to drive the step recovery diode and impulse signals with 5 MHz repe-

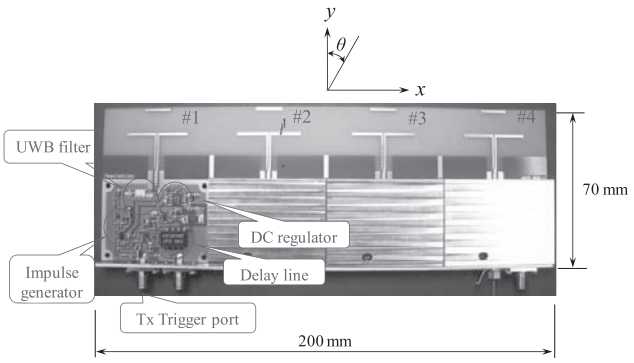

Fig. 4 Photograph of the four-element antenna unit.

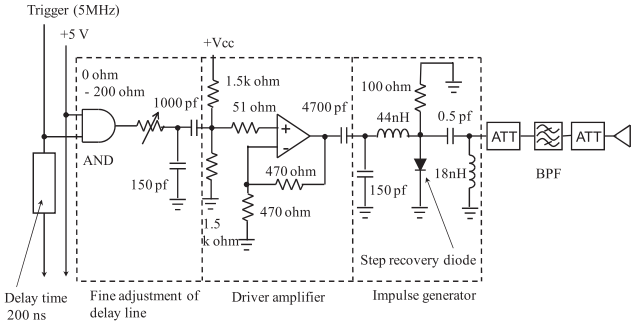

Fig. 5 Schematic circuit diagram of antenna subunit.

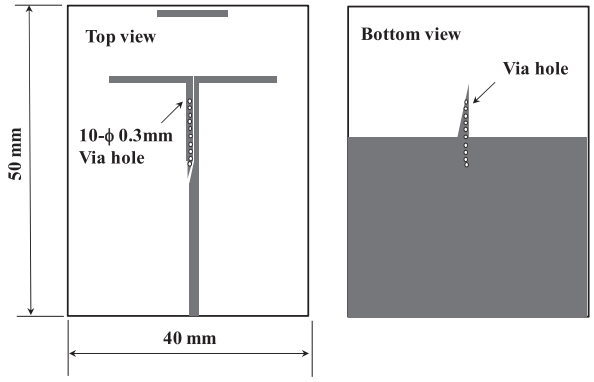

Fig. 6 Geometry of element antenna.

tition are obtained at the output of this circuit. Yagi-Uda antenna is adopted for array element for size reduction. Figure 6 shows physical dimensions of element antenna. Usually bandwidth of this antenna is narrow, however, its characteristics can be improved by introducing modified configuration of the microstrip-to-cps transition [8]. This characteristics of the balun are not sufficient but are wide enough as UWB radar application to be discussed here.

The experimental 16-element UWB array antenna is composed of four serially connected antenna units, as shown in Fig. 7. Table 1shows the basic design specifications of the experimental UWB array antenna.

The delay time of the delay line has been determined to be 200 ns for radar application with a detective capability of a 30 m range, because this delay time corresponds to the trigger interval T. Moreover, the rise time of the trigger signal tends to be delayed by passing through the delay line. Therefore, to avoid this delay, transmission line type IC's are adopted as the delay lines and succeeded in reducing pulse jitter.

The relation between the jitter t_j of impulse train and the main beam direction is

$$t_j = \frac{d}{c} \sin \theta_b \tag{2}$$

where c is the speed of light. θ_b is the main beam direction and d is the array spacing.

In order to suppress the beam fluctuation below the

Table 1 The basic design specifications.

No	Items	Specifications
1	Frequency bandwidth	3.4GHz~4.8GHz
2	Number of antenna elements	16
3	Delay time of delay line	T_D=200ns(approximately)
4	Trigger frequency(center)	5.0MHz
5	Impulse generation device	Step recovery diode
6	3dB beam width of array elements	*E*-plane: 5deg at 4GHz *H*-plane: 160deg at 4GHz
7	Array spacing	d=50mm(0.66 λ at 4GHz)
8	Antenna weighting	Taylor
9	Physical Dimensions	800mm(L)×70mm(W) ×10mm(H)

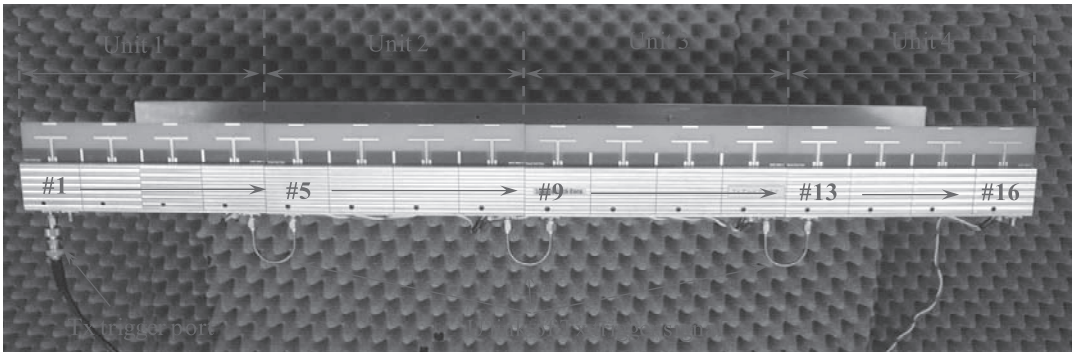

Fig. 7 Photograph of 16-element antenna.

3 dB beam width (5 deg.) of 16-element array antenna, it is required to reduce the jitter of trigger pulse below 14.5 ps p-p, because beam direction is fluctuated 2.9 ps/deg.

5. Experimental Results

5.1 Impulse Array Antenna (IAA)

Prior to the measuring antenna performance, adjustment of the delay time T_D in each subunits was carried by the measurement of impulse radiated by each antenna element and the time differences were precisely adjusted to be less than approximately 10 ps by controlling the threshold level of the impulse generator. Figure 8 shows one example of the impulse waveform radiated by #8 element antenna measured by the same Yagi-Uda antenna in front of #8 element. Almost the same waveforms were observed for other 15 antennas.

Trigger frequency is set to be 5.0 MHz so that the beam direction becomes θ=0. However, the frequency of the beam direction θ=0 became 4.9926 MHz because of the deviation in the delay time of the delay lines.

Impulse waveforms radiated by the each element antenna have been measured using an electromagnetic probe composed of the same antenna element. Figure 9 shows one example of the measured array weighting.

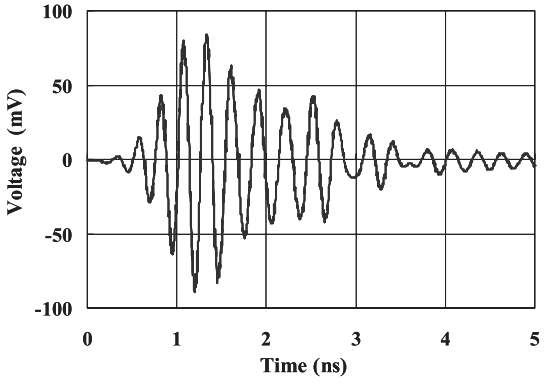

Fig. 8 Measured transmitted waveform (element #8).

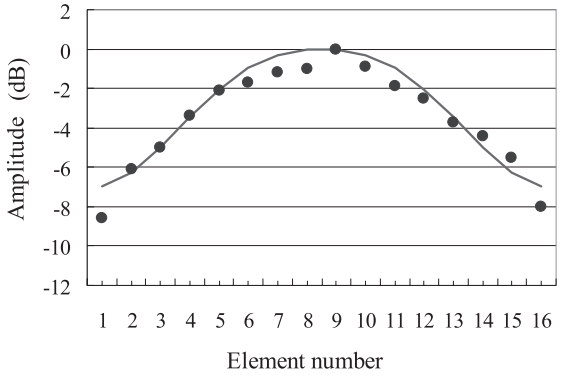

Fig. 9 Array weighting of 16-element array antenna (Solid line: simulation; circles: measurement).

As described in Table 1 Taylor array weighting was introduced to reduce the side-lobe below −23 dB. The measured array weight and calculated values of the array weighting factor are shown in Fig. 9 as dots and solid line, respectively.

Figures 10(a) and 10(b) show the measurement results of the E- and H-plane patterns of one element antenna, respectively. The 3 dB beam widths of the E- and H-planes are 90 deg and 160 deg at 4 GHz, respectively. Figure 11 shows return loss (S11) characteristics of element antenna

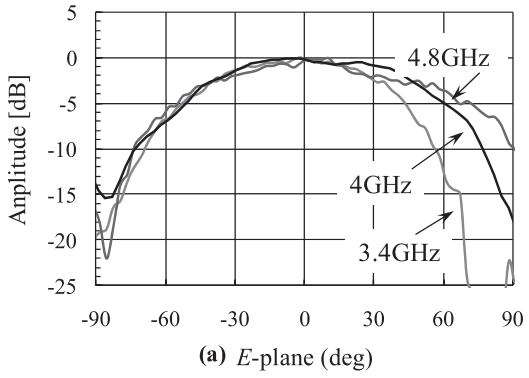

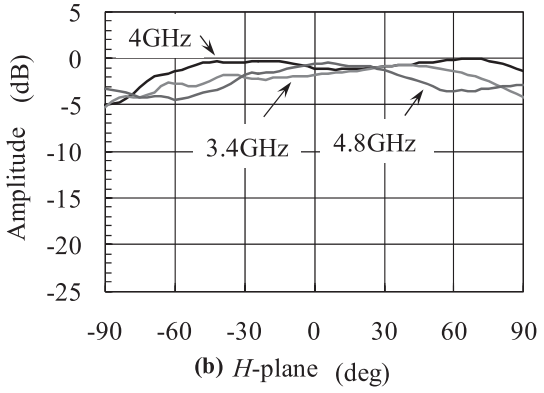

Fig. 10 Measured element pattern.

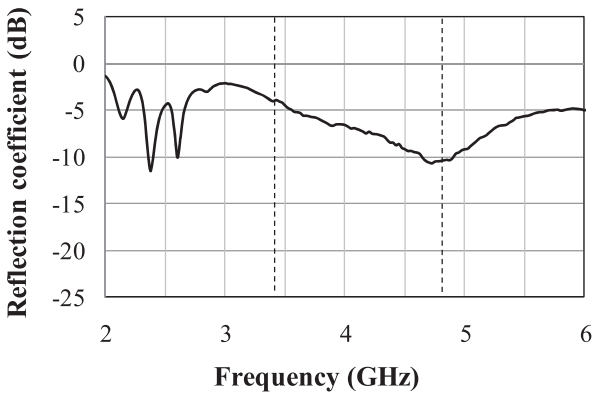

Fig. 11 Reflection coefficient of Yagi-Uda antenna.

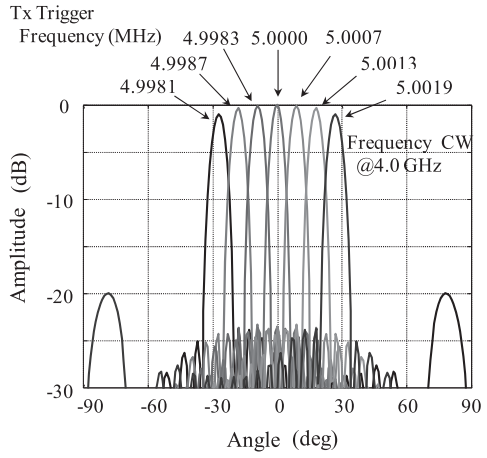

(a) Calculated

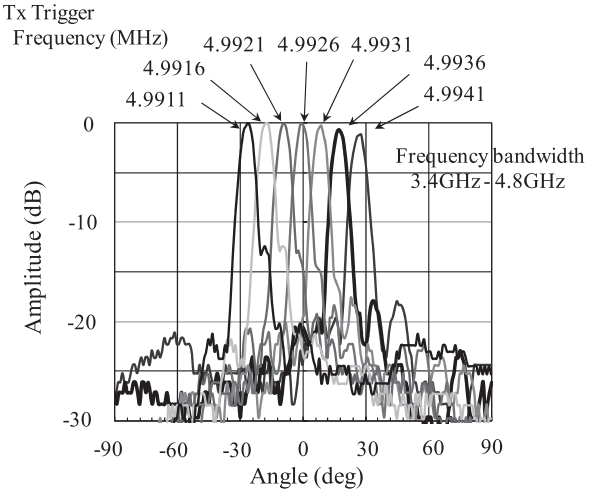

(b) Measured

Fig. 12 Calculated and measured 16-element array antenna pattern of peak level of waveform (*E*-plane).

using the balun previously described.

The calculated and measured antenna pattern obtained by changing trigger frequency from *Fc*-2 kHz to *Fc*+2 kHz (*Fc*: center frequency) are shown in Fig. 12(a) and Fig. 12(b), respectively. In Fig. 12(a), theoretical radiation pattern for continuous wave at 4 GHz is shown, while the measured peak level of the radiated waveforms is plotted as a function of θ. It can be seen that the change of beam direction is almost proportional to the difference of trigger frequency f-FC. Good agreement between the calculated and measured data is observed. The measured data also show that the beam width is 5 deg and the side lobe level is −14 dB when θ=0. Asymmetrical main beam levels is observed in Fig. 12(b), which is due to the symmetrical element pattern shown in Fig. 10. As Asymmetrical pattern and side lobe are also observed in each radiation pattern which is due to the imbalance of delay times between among delay lines.

Figure 13 shows peak-to-peak the pulse jitter of the

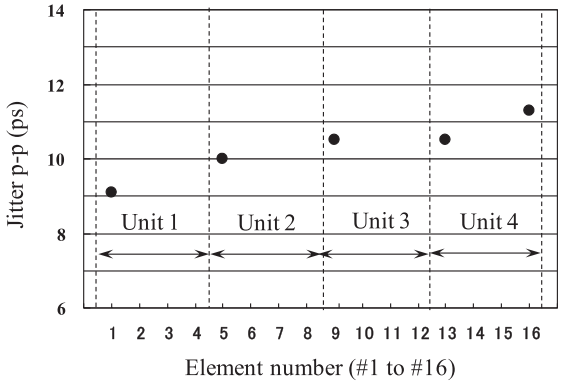

Fig. 13 Measured jitter of transmitted waveform.

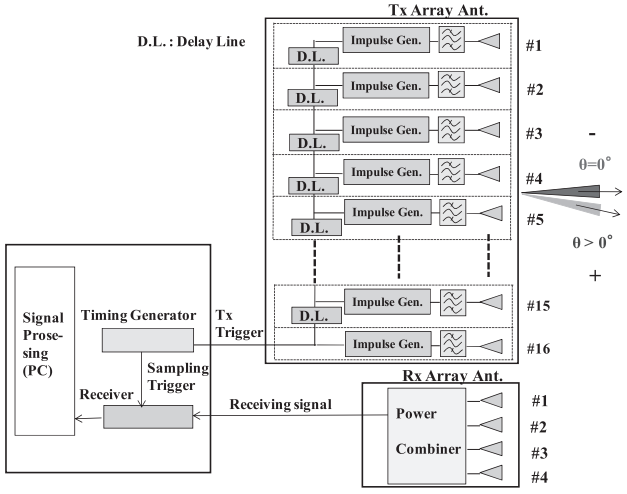

Fig. 14 Transmitter and receiver of radar system.

transmitted signal from each antenna element. Since the increase of pulse jitter rate induced by a delay line is 9.3 ps p-p at #1 and 11.3 ps p-p at #16, a 2 deg degradation is observed. The degradation of jitter due to delay lines is much smaller than we expected, and the dominant origin of jitter is considered to be the phase noise of trigger signal source. A 5.9 deg degradation of main beam direction can be observed. The performance of pulse jitter is required to be less than 14.5 ps p-p for the suppression of the beam fluctuation as mentioned in chapter 4. The experimental results demonstrates that the beam fluctuation is below 3.9 deg and this value is smaller than the 3 dB beam width (5 deg) of 16-element array antenna. To improve jitter characteristics it requires to adopt a signal source having very low phase noise.

5.2 Basic Evaluation as a Short Range UWB Radar

Based on the above discussion and experiments, a UWB short range scanning radar was fabricated and the performance was experimentally evaluated. This trial radar system is basically composed of the transmitter and receiver as shown in Fig. 14. The transmitter is the scanning antenna in described in ch.4, and the receiver is a 4-element fixed

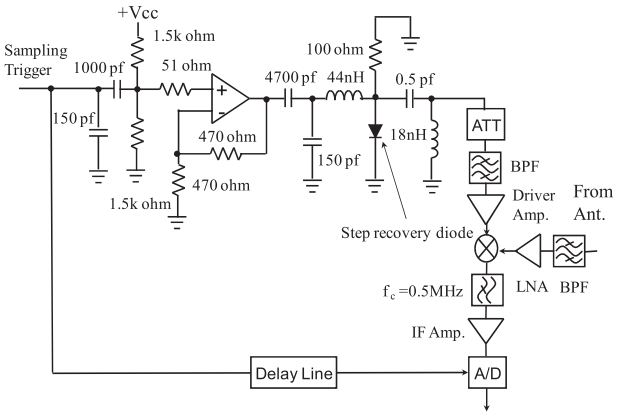

Fig. 15 Receiver circuit configuration.

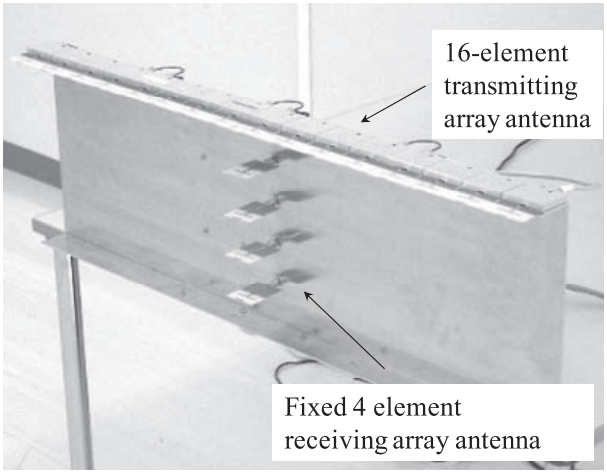

Fig. 16 Photograph of trial UWB short range radar.

array antenna and a correlation detector for received signal detection. Figure 15 shows the schematic diagram of receiver circuit. This circuit is equipped in the every element antenna, and composed of low noise amplifier, impulse generator, mixer and IF amplifier. The circuit configuration of the impulse generator is the same as that of transmitter. The photograph of the trial UWB radar is shown in Fig. 16.

The experiment was carried out by detecting signals reflected by two human beings. Target location for measurement is shown in Fig. 17. The distance and angle of one target position and that of the other one were 2.5 m and 0 deg, and 3.2 m and −20 deg, respectively. The maximum range of the radar was set to be 5.5 m, and the transmitting antenna beam was scanned from −30 deg to +30 deg by every 3 deg step.

Figure 18 shows the measured radar scope image. Detected signals are displayed in the scope with contrast modulation by received signal strength at every observing points.

The concrete wall located at 5.5 m apart from the radar is detected as large reflected signals, however, precise measurement is possible in the area at the front of the wall. It can be seen that two human bodies were distinguished clearly and distance resolution of 25 cm and angle resolution below

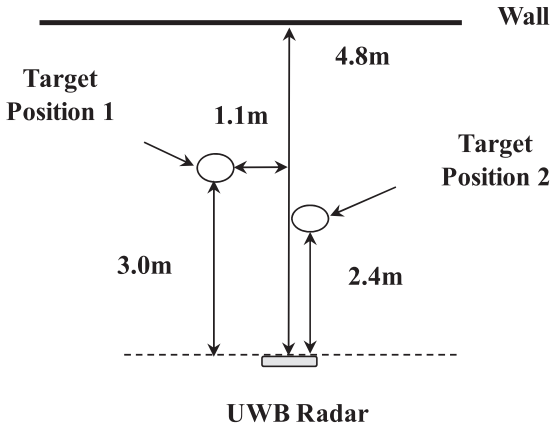

Fig. 17 Target location for measurement.

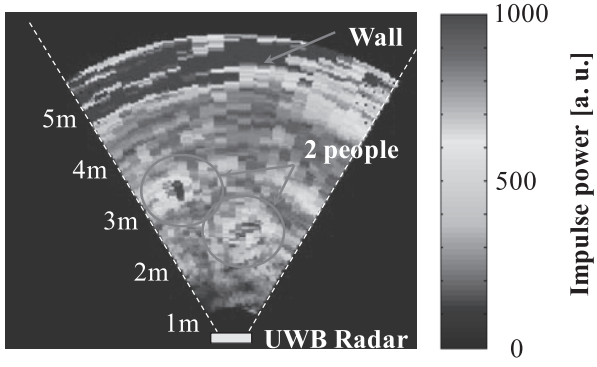

Fig. 18 Measured example of radar scope image.

10 deg are obtained. Improvement of resolution and moving target detection will be achieved with ease by introducing image data processing technology.

6. Conclusions

A UWB impulse array antenna (IAA) utilizing a novel electrical scanning system with tapped delay lines has been proposed and its usefulness has been experimentally verified. The experimental antenna is composed of impulse generators installed in each antenna element and tapped delay lines used for creating transmitting trigger signals, which is a simple circuit configuration. It has been shown that the output phase of the transmitting wave can be controlled by controlling the period of the trigger signal, and beam direction can be controlled from −30 deg to +30 deg by changing the trigger frequency from Fc−2 kHz to Fc+2 kHz. Evaluation of this antenna as a short range radar has been carried out and distance resolution of 25 cm and angle resolution below 10 deg have been obtained. The UWB antenna proposed here is considered to be applicable to short-range radars such as obstacle detectors, anti-collision sensors and through-wall radars. The detailed measurement and analysis as a radar system have been going on, and these results will be presented in a follow-up report.

Acknowledgment

The authors would like to thank Dr. Mitsuo Makimoto, Sakura Tech Corporation, Kawasaki, Japan, for his continuous support and helpful discussion.

References

[1] G. Rollmann and H.L. Bloecher, "The impact of SARA for further advances in automotive microwave sensing," Proc. 37th European Microwave Conference, pp.1523–1525, Oct. 2007.
[2] H. Veenstra, E. Heijden, M. Notten, and G. Dolmans, "A SiGe-BiCMOS UWB receiver for 24 GHz short-range automotive radar applications," Proc. IEEE MTT-S Int. Microw. Symp., pp.1791–1794, June 2007.
[3] A.G. Yarovoy, X. Zhuge, T.G. Savelyev, and L.P. Ligthart, "Comparison of UWB technologies for human being detection with radar," Proc. 37th European Microwave Conference, pp.1574–1577, Oct. 2007.
[4] C. Lièbe, A. Gaugue, X. Zhao, J. Khamlichi, and M. Mènard, "A through wall UWB RADAR with mechanical sweeping system," Proc. 39th European Microwave Conference, pp.1634–1637, Oct. 2009.
[5] A. Tan, M. Chia, and K. Rambau, "Design of ultra-wideband monopulse receiver," IEEE Trans. Microw. Theory Tech., vol.54, no.11, pp.3821–3827, Nov. 2006.
[6] K.-J. Koh and G.M. Rebeiz, "An X- and Ku-band 8-element phased-array receicer in 0.18-μSiGe BiCMOS technology," IEEE J. Solid-State Circuits, vol.43, no.6, pp.1360–1371, June 2008.
[7] F. Sakai and K. Ohta, "UWB array antenna utilizing novel electrical scanning system with tapped delay lines," 2010 IEEE MTT-S Int. Microw. Symp., pp.1262–1265, May 2010.
[8] Y.G. Kim, D.S. Woo, K.W. Kim, and Y.K. Cho, "A new ultra-wideband microstrip-to-CPS transition," 2007 IEEE MTT-S Int. Microw. Symp., pp.1563–1566, July 2007.



Fuminori Sakai received the B.E. degree from Osaka Institute of Technology, Osaka, Japan, in 1982. From 1982 to 2003, he joined Fujitsu Ltd., Tokyo, Japan, where he was engaged in research and development on radar systems. Next, from 2004 to 2007, he was with Keycom Corporation, Tokyo, Japan, where he was engaged in research on millimeter wave imaging system. Currently he has been with Sakura Tech Corporation, Kawasaki, Japan, where he has been president since 2008. His current interests involve microwave/millimeter wave radar systems and related components. Mr. Sakai is a member of IEEE.



Kazuo Ohta received the B.E. degree from Gunma University, Gunma, Japan, in 1971. From 1971 to 2002, he joined Toshiba Corporation, Tokyo, Japan, where he was engaged in research and development on telemetric systems. Next, from 2003 to 2007, he managed the engineer office, Yokohama, Japan, and was engaged in the consulting service of the aviation security systems. Currently he has been with Sakura Tech Corporation, Kawasaki, Japan, where he has been general manager since 2008. His current interests involve microwave/millimeter wave radar systems and related components. Mr. Ohta is a member of the Institution of Professional Engineers (IPEJ), Japan.



Kunio Sawaya received the B.E., M.E. and D.E. degrees from Tohoku University, Sendai, Japan, in 1971, 1973 and 1976, respectively. He is presently a Professor in the Department of Electrical and Communication Engineering at the Tohoku University. His areas of interests are antennas in plasma, antennas for mobile communications, theory of scattering and diffraction, antennas for plasma heating, and array antennas. He received the Young Scientists Award in 1981, the Paper Award in 1988, Communications Society Excellent Paper Award in 2006, and Zen-ichi Kiyasu Award in 2009 all from the Institute of Electronics, Information and Communication Engineers (IEICE). He served as the Chairperson of the Technical Group of Antennas and Propagation of IEICE from 2001 to 2003, the Chairperson of the Organizing and Steering Committees of 2004 International Symposium on Antennas and Propagation (ISAP'04) and the President of the Communications Society of IEICE from 2009 to 2010. Dr. Sawaya is a senior member of the IEEE, and a member of the Institute of Image Information and Television Engineers of Japan.